33352/12-3

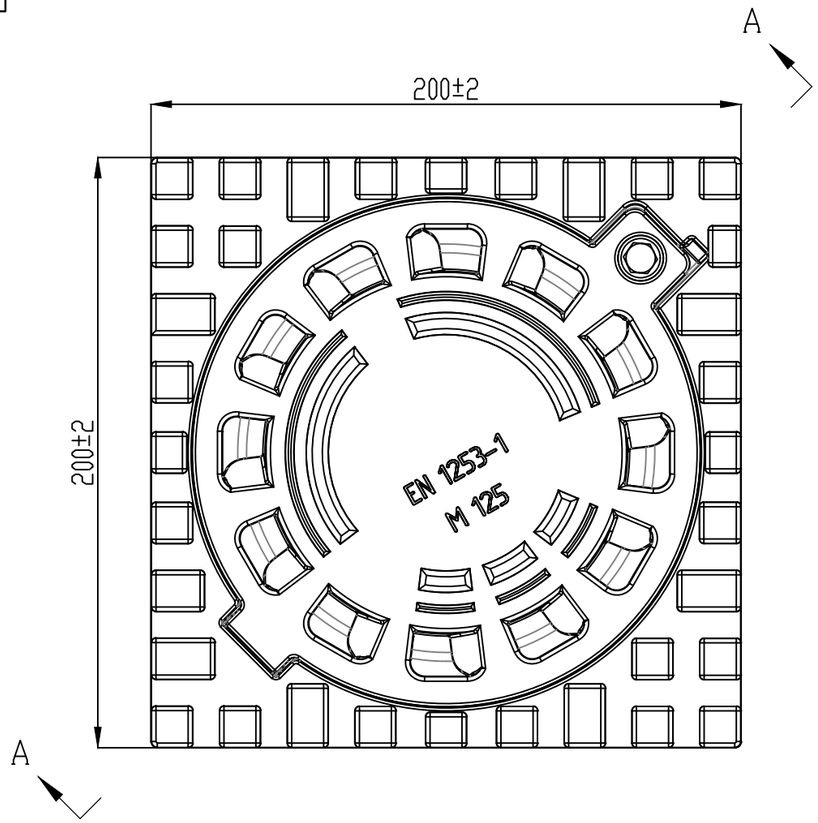

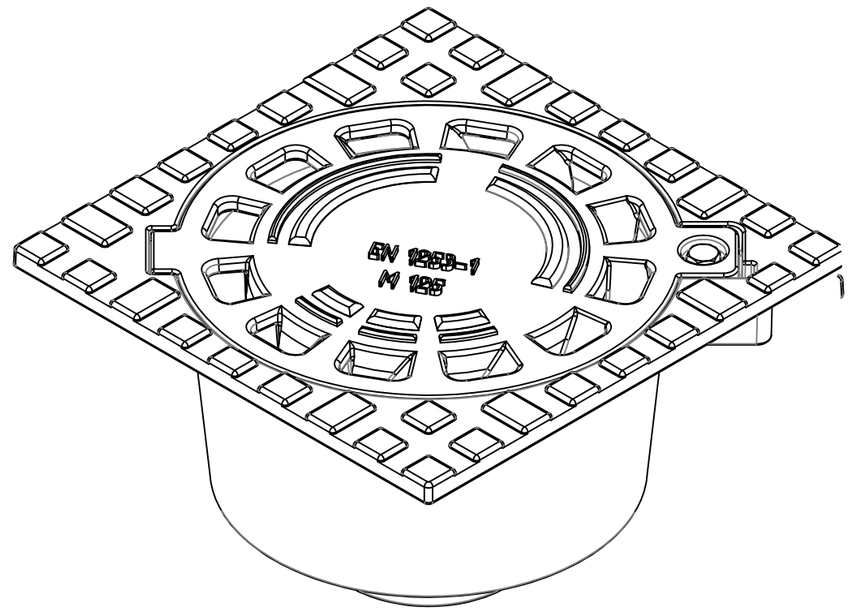

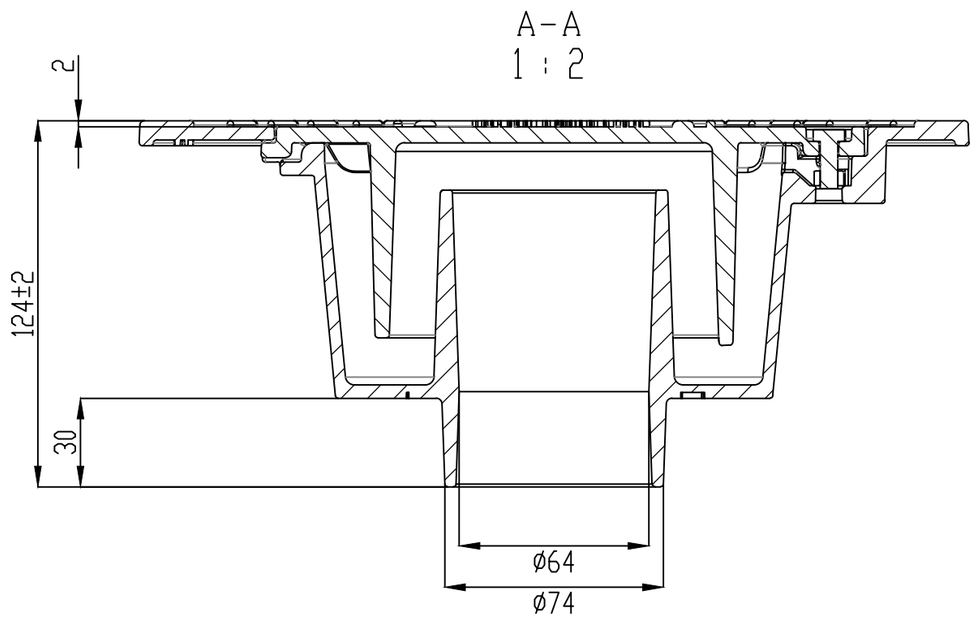

1. According to GOST 26645-85 for casting from 10 to 40 kg of precision class 9, the deviation from the table can be up to 8%
2. The cover weight is 3.87 kg

							Art.	33352/12-3
Rev.	Sheet	Doc. Nr.	Sign	Data	Trap type M125 200x200 vertical output DN110	Let.	Weight [kg]	Scale
Dvlpd by		Prokopenko		04.02.2021			5.69	1:5
Chkd by		Kachanovskyy				Sheet 1	Sheets 1	
Tech. Ctrl		Tsyurak						
Reg. Doc. Ctrl		Dyka			GGG50	VODALAND		
Aprvd by		Dorel						

Primary Usage	Reference No.		Sign. and date	Copy inv. No.	Repl. Inv. No.	Sign. and date	Orig. Inv. No